Trapezoidal screw
Tr

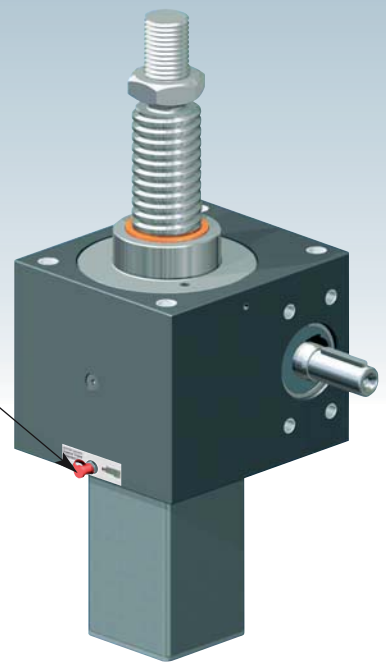

UNIQUE:
Screw lubrication
during operation

GSZ-100-S translating screw 100 kN

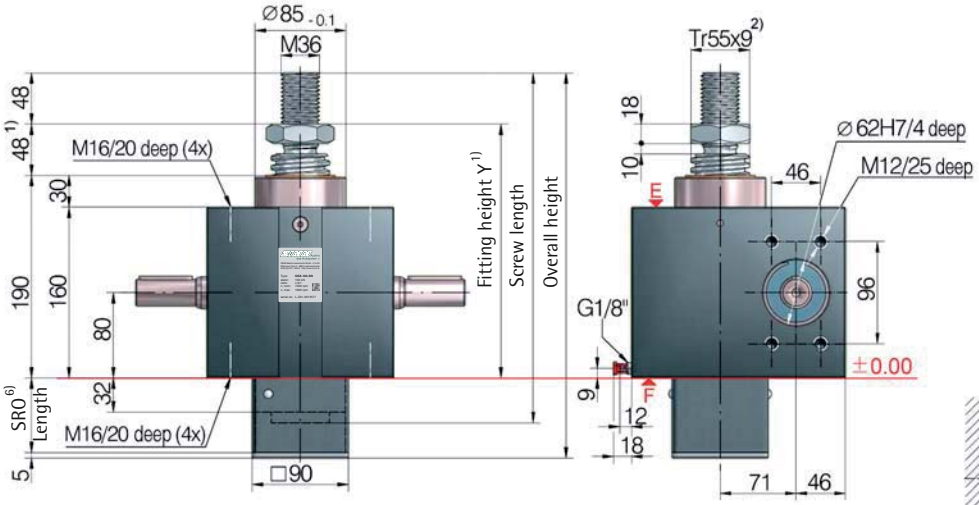

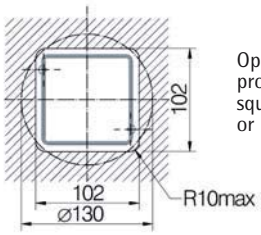

Opening for
protective tube SRO
square 102x102
or round Ø 130

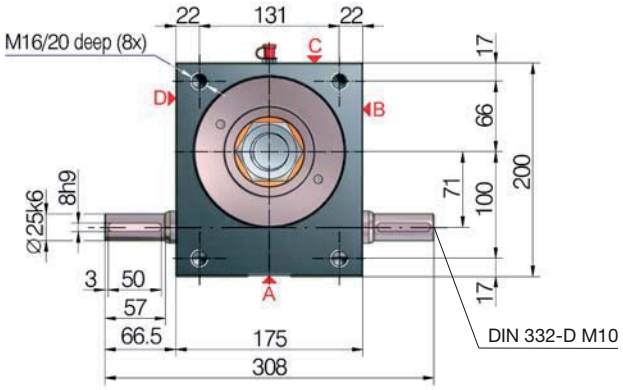

6)Protective tube length SRO with Tr 55x9 screw

Without escape/ rotation protection	Escape/ rotation protection	Rotation protection, with limit switch set ES	Rotation protection with ES and KAR*
82+stroke	112+stroke	144+stroke	189+stroke

*Hinged bearing plate KAR, fitted on face F (below)

1)Fitting height "Y" for 0-stroke, with Tr 55x9 screw

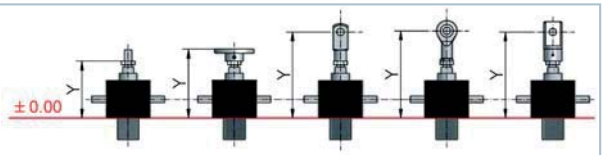

All dimensions in mm

Bellows FB	Standard screw end* Y	Fixing flange BF Y	Forked end GK* Y	Rod end KGK* Y	Pivot bearing end SLK Y
without bellows FB	238	288	382	380	346
Z-100-FB-285	311	313	455	453	371
Z-100-FB-600	308	310	452	450	368
Z-100-FB-1000	366	368	510	508	426
Z-100-FB-1500	416	418	560	558	476

*with bellows fixing ring Z-100-FBR

Standard ratios

Type	Verison	Speed	Standard screw2)	i	Stroke per drive shaft rotation5)
GSZ-100-SN	Translating	Normal	Tr 55x9	9:1	1.00 mm
GSZ-100-SL	screw	Low speed		36:1	0.25 mm
GSZ-100-RN	Rotating	Normal	Tr 55x9	9:1	1.00 mm
GSZ-100-RL	screw	Low speed		36:1	0.25 mm

Screw jack mounting

max. load:	100 kN compressive and tensile load
Screw:	M16, strength class 8.8
Screw-in depth:	16 to 20 mm
Tightening torque:	82 Nm
Screw locking:	with Loctite 243

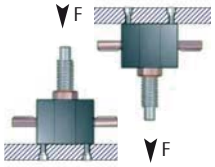

Duty cycle thermal limit, for S+R

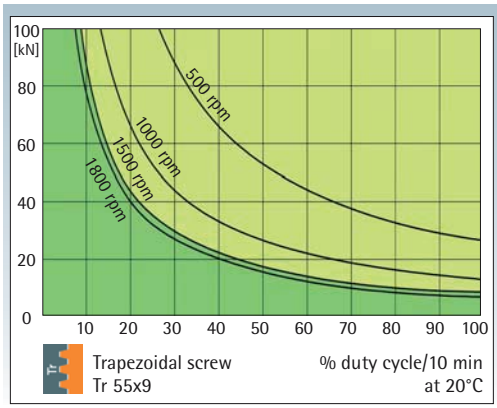

These curves are for guidance under standard industrial conditions (ambient temperature etc.) and correct maintenance (lubrication etc.).
The max. input drive torques for optimum service life are at the right page - technical data (1500 rpm)

KGT:
% duty cycle
2 times to
4 times higher

ZIMM®
© by ZIMM Austria 2015

Trapezoidal screw
Tr

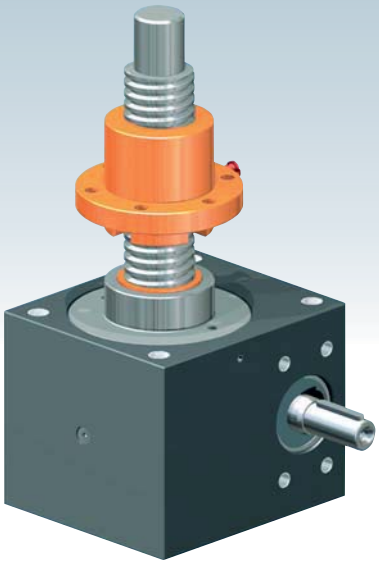

GSZ-100-R rotating screw 100 kN

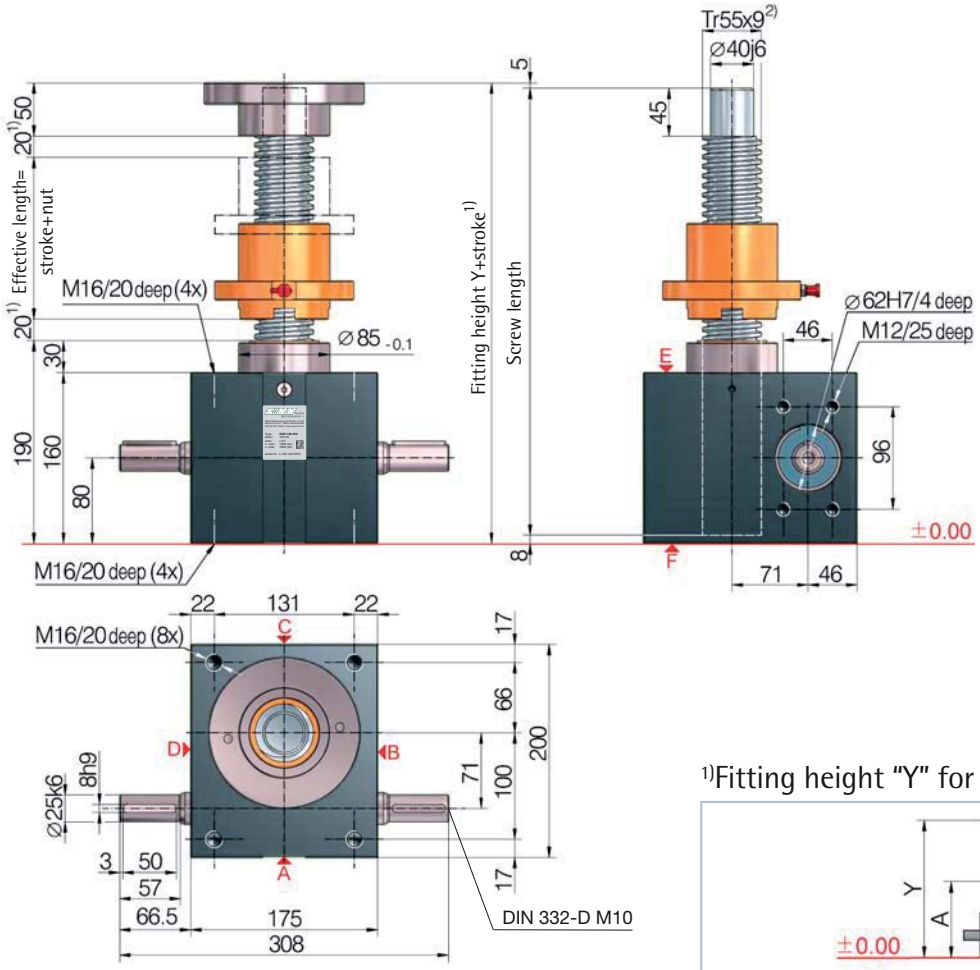

1)Fitting height "Y" for 0-stroke, with Tr 55x9 screw

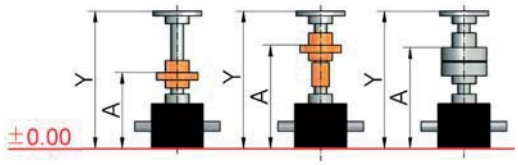

All dimensions in mm	Duplex nut DM	Duplex nut DM with SIFA	Self-aligning nut PM
Bellows FB	**Y/A**	**Y/A**	**Y/A**
without bellows FB	370/246	453/329	470/355
2x Z-100-FB-285	478/299	556/377	578/408
2x Z-100-FB-600	472/296	550/374	572/405
2x Z-100-FB-1000	588/354	666/432	688/463
2x Z-100-FB-1500	688/404	766/482	788/513

Detailed instructions for determining the length can be found in Section 8

100 kN

Technical data series GSZ-100-S / GSZ-100-R

max. compressive/tensile force, static	- 100 kN (10 t)
max. compressive/tensile force, dynamic	- see duty cycle curves
Nominal speed	- 1500 rpm
max. drive shaft speed	- 1800 rpm (depending on the load and duty cycle)
Screw size standard	- Tr 55x9 2)
Gear ratio	- 9:1 (N) / 36:1 (L)
Housing material	- GGG-50, corrosion-resistant
Worm shaft	- steel, case-hardened, ground
Weight of screw jack body	- 30 kg
Weight of screw/m	- 15.7 kg
Gearbox lubrication	- synthetic fluid grease
Screw lubrication	- grease lubrication
Gearbox operating temperature	- max. 60°C, higher on request
Moment of inertia	- N: 12.53 kg cm² / L: 4.75 kg cm²
Input torque (at 1500 rpm)	- max. 53.4 Nm (N) / max. 13.5 Nm (L)
Drive-through torque	- max. 540 Nm

Drive torque M_G (Nm)	- F (kN) x 0.72 3)5) + M_L (N-normal) - F (kN) x 0.23 3)5) + M_L (L-low speed)
Breakaway torque	- Drive torque M_G x 1.5
Idling torque 4) M_L (Nm)	- 1.68 (N-normal) / 1.02 (L-low speed)

Between gearbox and nut or nut and end of thread, provide for a safety distance of (minimum) 20 mm!
See Section 7 for the checklist.

Important information
1) - extension if a bellows or spiral spring is fitted: see the table or Section 8
2) - Tr 55x9 is standard, also available: double-pitch, stainless steel, left-handed, increased screw Tr 60x9 (only for the R version)
3) - factor includes efficiency, ratio and 30% safety
4) - at 20°C, can be higher when new
5) - for a 9 mm screw pitch